PNEUMATIC ACTUATOR · 0–90°

AT801U

Double acting & spring return pneumatic actuator

AT801U-DM

Quarter-turn pneumatic actuator for 0–90° valve automation, available double acting (D) or spring return with spring sets S 05 to S 12.

- Double acting or spring return (S 05 – S 12)
- ISO 5211 F16 + F25 standard flange
- Optional flanges: F25
- Air ports 2 and 4 · G1/2"
- ST, HT and LLT temperature versions

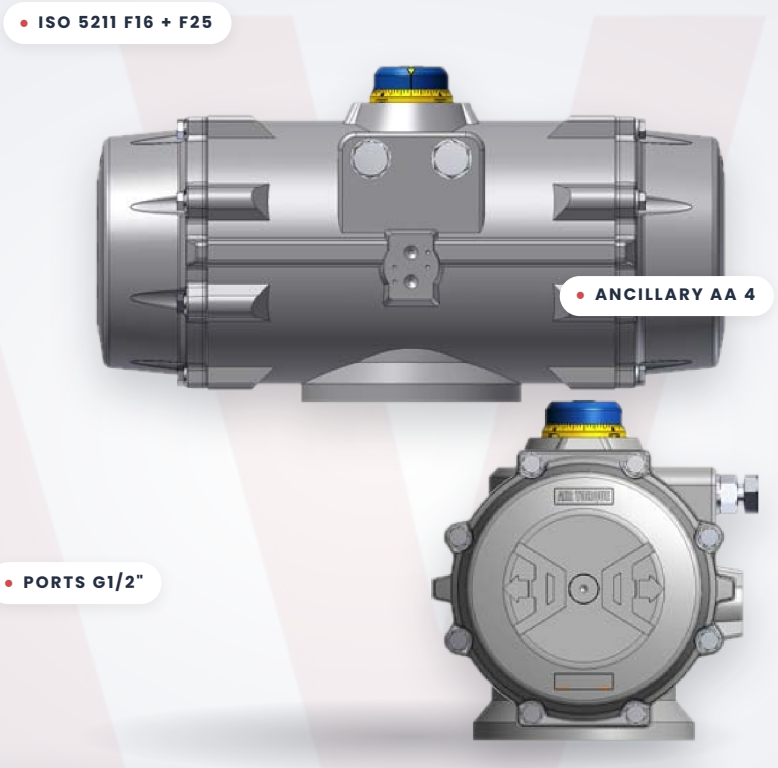

6306 Nm	7 bar	F16/F25	127 kg
DA TORQUE @ 7 BAR	MAX. PRESSURE	STD ISO 5211 FLANGE	APPROX. WEIGHT (DA)

Double acting output torque.

NM · 0° AND 90°

Pressure (bar)	2.5	3	3.5	4	4.2	4.5	5	5.5	6	7	8
Torque (Nm)	**2252**	**2703**	**3153**	**3604**	**3784**	**4054**	**4504**	**4955**	**5405**	**6306**	**7207**

Stroke

Rotation & travel adjustment

Rotation (std)	**0° – 90°**
Max. stroke	**-5° to +95°**
Adjustable	**-5...+15° / +75...+95°**
Screw adjustment	**1° per 1/6 turn**

Air & timing

Chamber Ø 330 mm · max. 7 bar

Air volume (open/close)	**25 / 40 L**
Moving time D (open/close)	**6.0 / 7.0 s**
Moving time S (open/close)	**7.5 / 8.5 s**
Ancillary attachment	**AA 4**

Temperature

Operating range options (°C)

ST (standard)	**-40 to +80**
HT (high temp.)	**-15 to +150**
LLT (extreme low)	**-55 to +80**
Max. pressure	**7 bar**

SPRING RETURN SETS S 05 · S 06 · S 07 · S 08 · S 09 · S 10 · S 11 · S 12 — Full torque table overleaf

Moving times measured under the test conditions listed overleaf. Every temperature range option requires proper components and lubricant – see Air Torque technical data sheet T.D.S. U00501E.

SUPPLIED & SUPPORTED IN THE UK BY
Actuation Valve & Control Ltd
actuation.co.uk

DIMENSIONS & MOUNTING

AT801U D/S – 90° dimensions in mm.

ISO 5211 flange options, drive square details and spring return output torque for every spring set from S 05 to S 12.

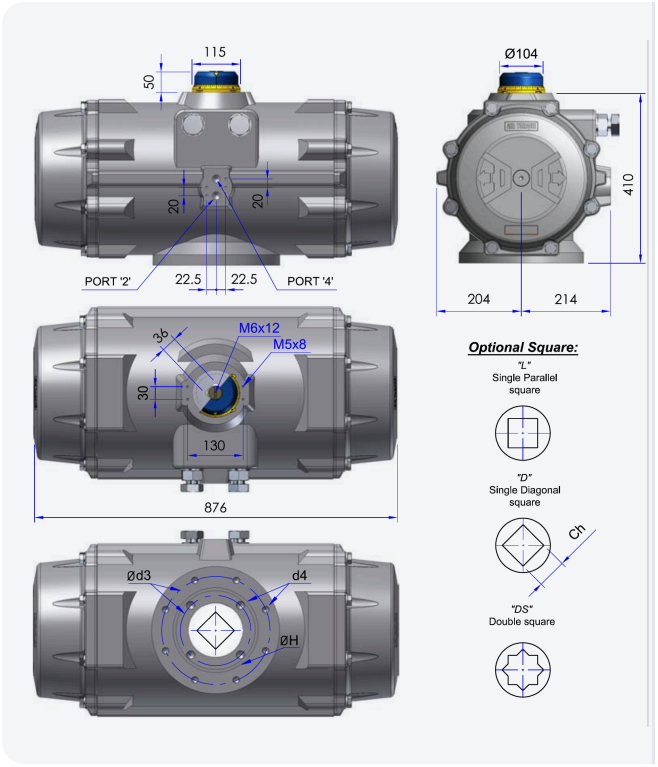

ISO 5211 FLANGE DIMENSIONS

	STANDARD		OPTIONAL
ISO 5211	**F16 + F25**		**F25**
Ø d2	NA	200	200
Ø d3	165	254	254
d4	M20x30	M16x24	M16x24
Ø H	130	200	200
Ch x l min. D	55x57		
Ch x l min. DS	46x48 - 55x57		
h min.	2.5	2.5	2.5
h1	NA	3.5	3.5

Spigot (Ø d2 / h1): only on request. NA = not available.

CONNECTION / ATTACHMENT

Pressure connection: port 2 and 4	**G1/2"**
Ancillary attachment	**AA 4**

OPTIONAL SQUARE

"D" single diagonal square · **"L"** single parallel square · **"DS"** double square

Spring return output torque.

NM · START / END OF STROKE

Spring set	2.5 bar		3 bar		3.5 bar		4 bar		4.2 bar		4.5 bar		5 bar		5.5 bar		6 bar		7 bar		8 bar		Spring stroke		Approx. weight (kg)
	0° Start	90° End	0° Start	90° End	0° Start	90° End	0° Start	90° End	0° Start	90° End	0° Start	90° End	0° Start	90° End	0° Start	90° End	0° Start	90° End	0° Start	90° End	0° Start	90° End	90° Start	0° End	
S 05	1332	1014	1783	1465	2233	1915	2684	2365	2864	2546	3134	2816	3585	3266									**1238**	**920**	**144**
S 06	1149	767	1599	1217	2049	1667	2500	2118	2680	2298	2950	2568	3401	3019	3851	3469							**1486**	**1104**	**147.5**
S 07			1415	969	1865	1420	2316	1870	2496	2050	2766	2321	3217	2771	3667	3222	4118	3672					**1733**	**1288**	**151**
S 08					1682	1172	2132	1623	2312	1803	2582	2073	3033	2524	3483	2974	3934	3424	4835	4325			**1981**	**1472**	**154.5**
S 09							1948	1375	2128	1555	2398	1825	2849	2276	3299	2726	3750	3177	4651	4078	5551	4978	**2229**	**1656**	**158**
S 10											2215	1578	2665	2028	3115	2479	3566	2929	4467	3830	5386	4731	**2476**	**1839**	**161.5**
S 11													2481	1781	2931	2231	3382	2682	4283	3582	5184	4483	**2724**	**2023**	**165**
S 12															2748	1983	3198	2434	4099	3335	5000	4236	**2971**	**2207**	**168.5**

MOVING TIME TEST CONDITIONS

(1) Room temperature, (2) actuator stroke 90°, (3) solenoid valve with orifice of 11 mm and a flow capacity Qn 6000 L/min, (4) inside pipe diameter 11 mm, (5) medium clean air, (6) air supply pressure 5.5 bar (79.75 psi), (7) actuator without external resistance load. When one or more of these parameters differ in the field, the moving time will be different.

OPERATING MEDIUM

The operating medium must be free of dust and oil. Maximum particle size must not exceed 30 µm (ISO 8573 Part 1, Class 5). To prevent water condensation and/or solidification (ice when the actuator works below 0 °C), the operating medium must have a dew point of -20 °C or at least 10 °C below the ambient temperature (ISO 8573 Part 1, Class 3).

Data supplied by Air Torque and provided for reference only. Specifications may change without notice – please confirm details with Actuation Valve & Control before ordering.

Sizing an Air Torque actuator?
Talk to our UK team about torque sizing, mounting kits and complete actuated valve packages.
actuation.co.uk